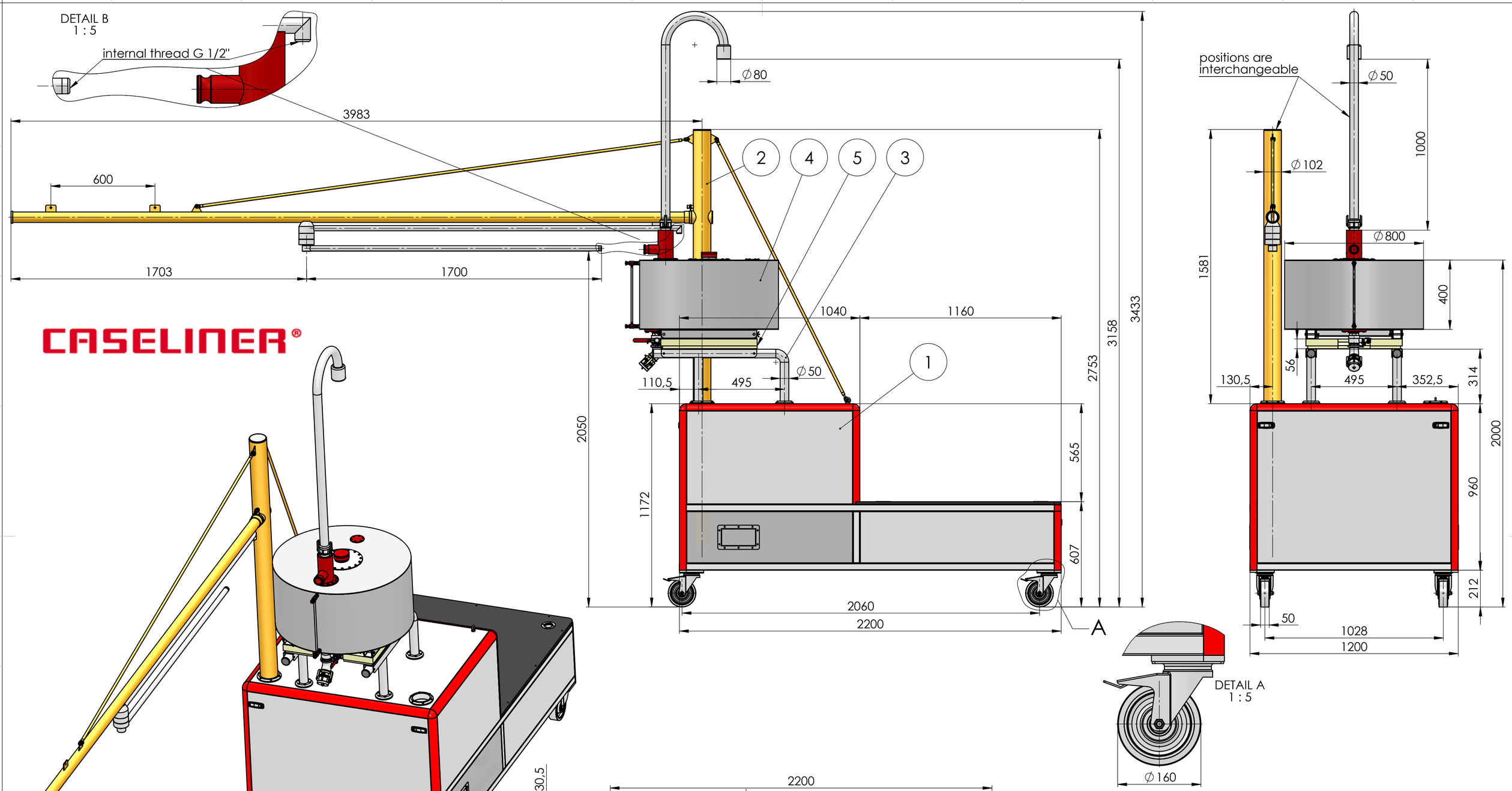

CASELINER®

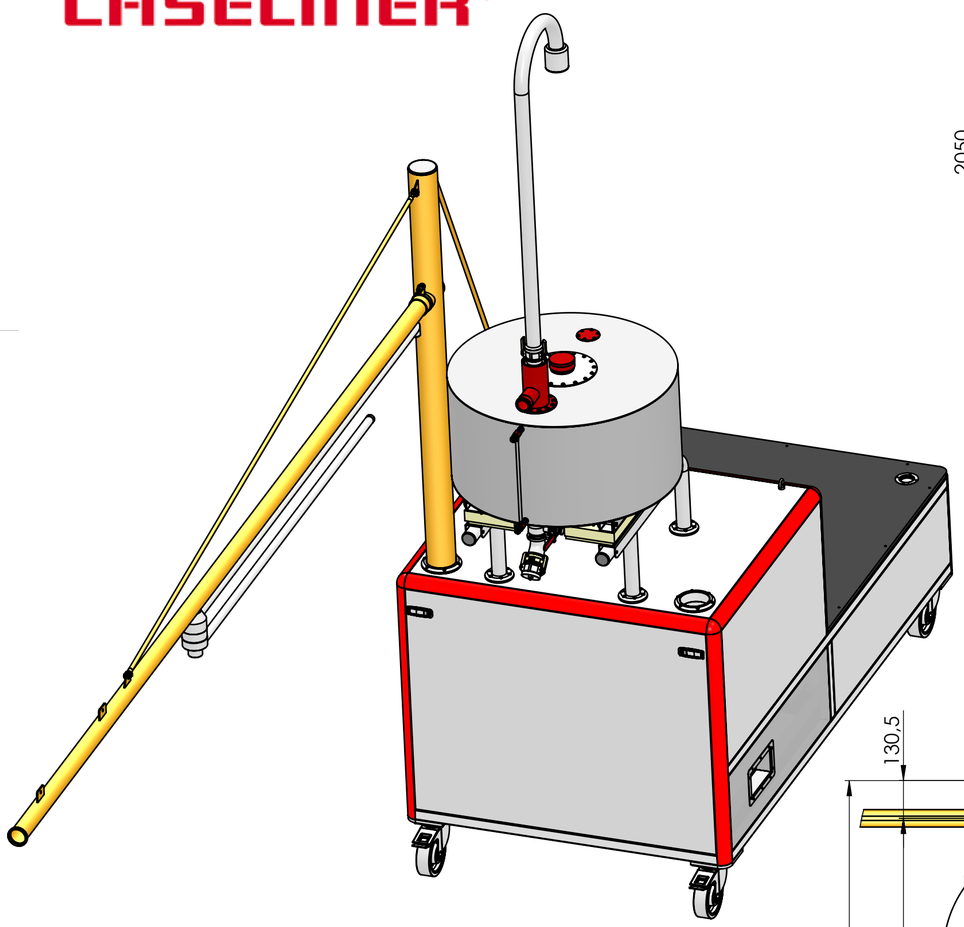

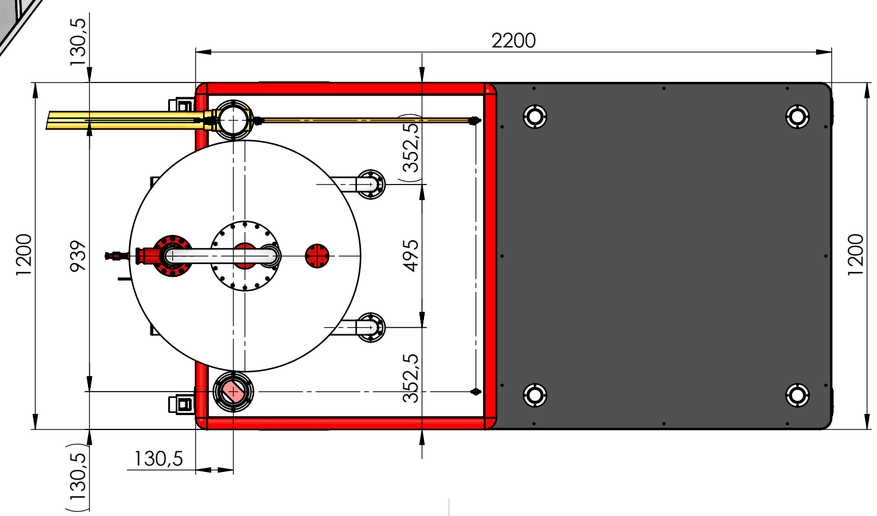

QUAN.	DESCRIPTION	PART CODE	WEIGHT	ANNOTATION	POS
1	WEIGHING CWU-300	0150221016	14.00 kg		5
1	RF200-FIA 252-7/S	0150121001	46.70 kg		4
2	RF200 HOLDERS INOX ENDU	0150221012	3.00 kg		3
1	ROTARY BOOM STANDART	0150311004-0	36.68 kg		2
1	PIT TROLLEY ENDURANCE-without accessories	0150311018	165.00 kg		1

THE INFORMATION CONTAINED IN THIS DRAWING IS THE SOLE PROPERTY OF CASELINER, s.r.o..
ANY REPRODUCTION IN PART OR AS A WHOLE WITHOUT THE WRITTEN PERMISSION OF CASELINER, s.r.o. IS PROHIBITED.

CASELINER s.r.o.

UNLESS OTHERWISE SPECIFIED:
DIMENSIONS ARE IN MILLIMETERS
TOLERANCES: ISO 2768-1 - m

title - stock size:		dimension standard:	material standard:	part number:	
scale	drawn:		surface finish:		
1:15	date:	15.9.2016	weight:	268.40 kg 591.78 lb	old drw.:
	approved by:		projection:		from day:
	date:		location:	D:\PROJEKTY SolidWorks\Caseliner\SW projekty\PIT TROLLEY ENDURANCE - 0150311018\SW\	

CASELINER s.r.o.
Nad Jezerem 568
252 42, Vestec
Czech Republic

title:
PIT TROLLEY ENDURANCE - Offer Accessories

dwg number:
5. presentation drawing

sheet 5 / 8